Conditional probability: tree diagrams

1

A bag has 5 red and 4 blue counters.
Two are taken without replacement.
Fill in the tree diagram.

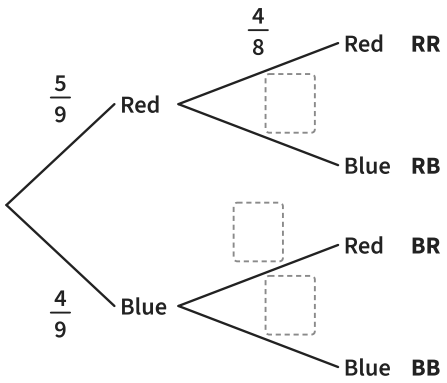

2

A bag has 4 green and 6 yellow counters.
Two are taken without replacement.
Fill in the tree diagram.

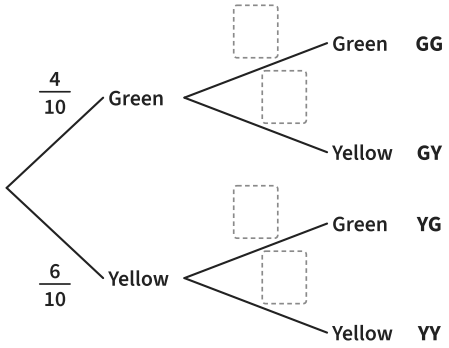

3

A bag has 3 red and 5 blue counters.
Two are taken without replacement.
Find the probability of one counter of each colour.

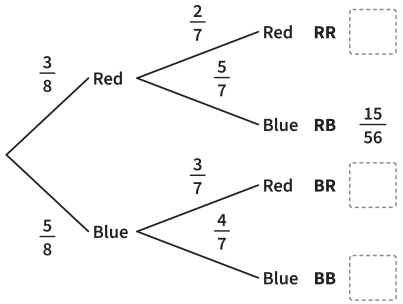

Answer _____

4

A bag has 6 pink and 3 grey counters.
Two are taken without replacement.
Find the probability of one counter of each colour.

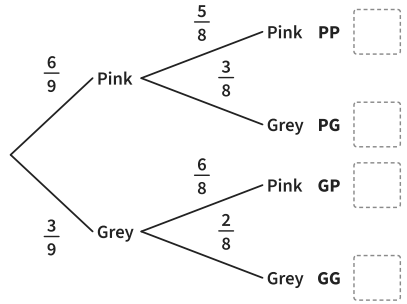

Answer _____

5 *Notice the change!*

A bag has 7 red and 3 blue counters.
Two are taken without replacement.
Find the probability that both counters are the same colour.

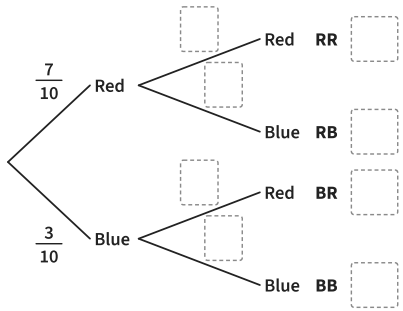

Answer _____

6

A bag has 2 red and 5 blue counters.
Two are taken without replacement.
Find the probability that at least one is red.

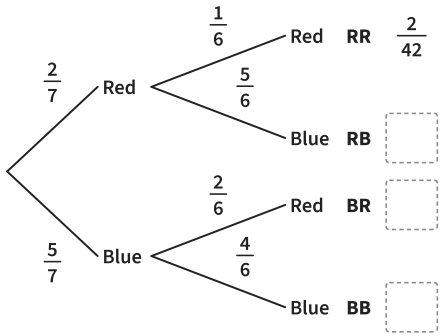

Answer _____

7

A tin has 4 lemon and 5 mint sweets.
Ali eats two at random.
Find the probability that at least one is lemon.

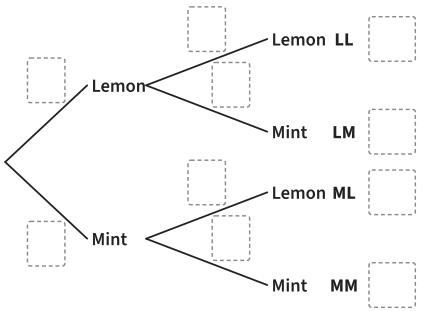

Answer _____

8

A bag has 3 red and 4 blue counters.
Two are taken without replacement.
Jo says the probability of one of each colour is $\frac{3}{7} \times \frac{4}{6} = \frac{12}{42}$.
Explain Jo's mistake. Find the right answer.

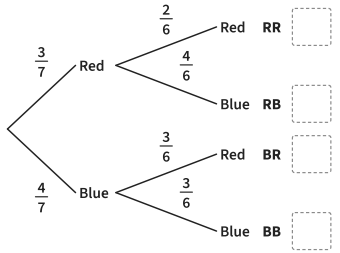

Answer _____

Conditional probability: tree diagrams *further practice*

9

A bag has 6 red and 2 blue counters.
Two are taken without replacement.
Fill in the tree diagram.
Find the probability of one counter of each colour.

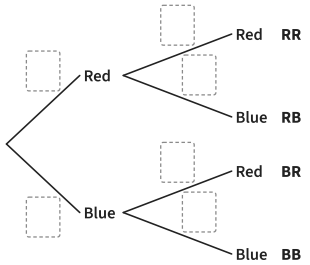

Answer _____

10

A drawer has 5 black and 3 white socks. Two are taken at random. Find the probability that they are the same colour.

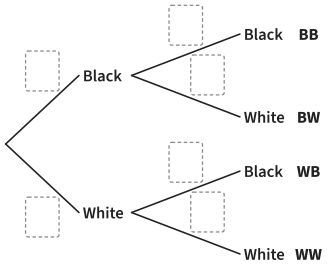

Answer _____

11

A box has 9 milk and 3 dark chocolates.
Sam eats two at random.
Find the probability that at least one is dark.

Answer _____

12

A bag has 4 red and 4 blue counters.
Two are taken without replacement.
Are they more likely to be the same colour or different colours?
Show how you decide.

Answer _____

13

A bag has 3 red and 2 blue counters.
Two are taken without replacement.
Ella says the probability that both are red is $\frac{3}{5} \times \frac{3}{5} = \frac{9}{25}$.
Explain her mistake.
Find the right answer.

Answer _____

14

A bag has 5 green and 5 yellow counters. Two are taken without replacement. Show that the probability that both are green is $\frac{2}{9}$.

Answer _____

15

A group has 5 girls and 3 boys.
Two are picked at random to hand out books. Find the probability that at least one boy is picked.

Answer _____

16

A bag has 4 red, 3 blue and 2 green counters. Two are taken without replacement. Show that the probability that they are the same colour is $\frac{5}{18}$.

Answer _____